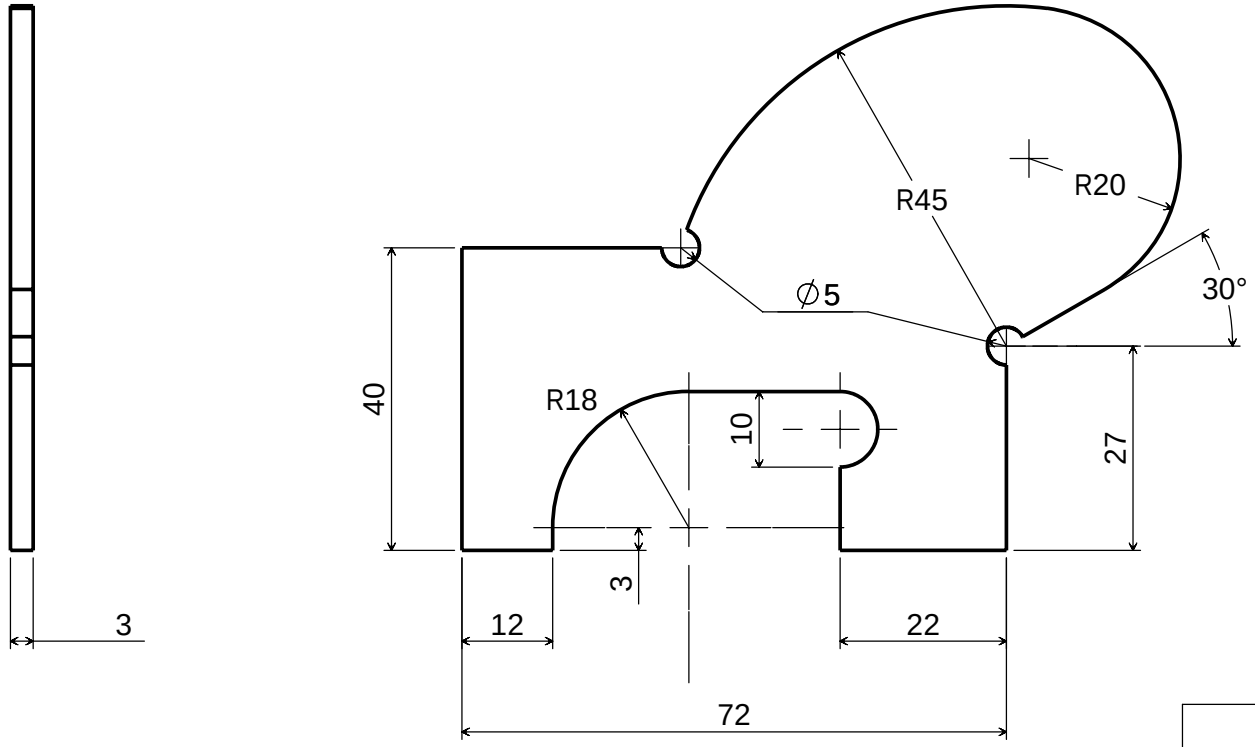

Skill Test	2011

PracticalStudent.com

Part Number : 1

Part Name : Skill Test 4

Material : Perspex / Aluminium / Brass	A4
	30/8/11
Required : 1	Drawing 1 of 1